ARAM ESPRESSO MAKER®

ASSEMBLY MANUAL

HOW TO ASSEMBLE YOUR ARAM

COMPONENTS

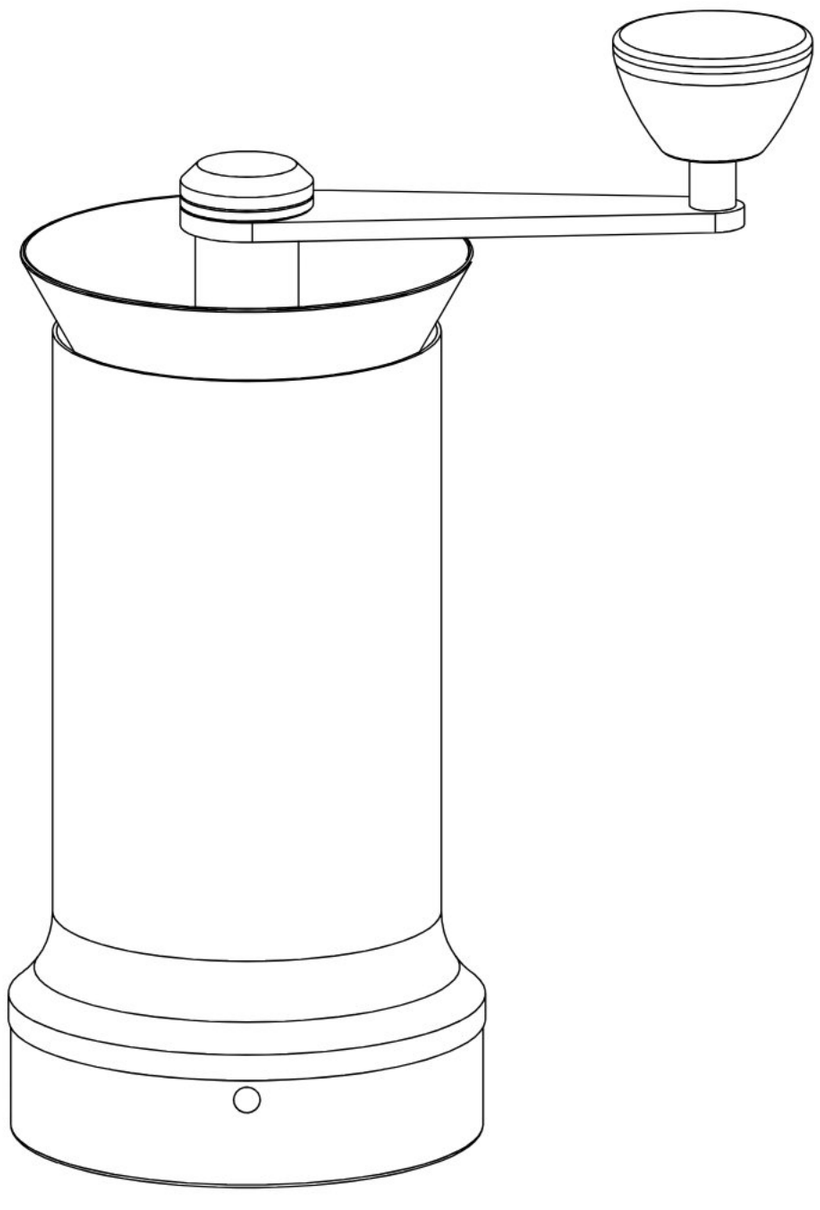

ESPRESSO MAKER

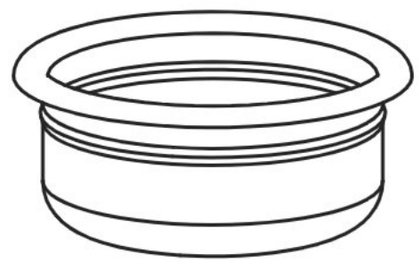

FILTER

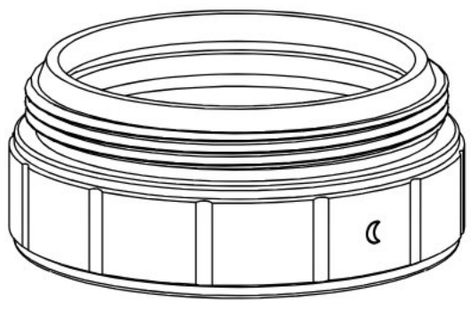

PORTAFILTER

ACCESSORIES

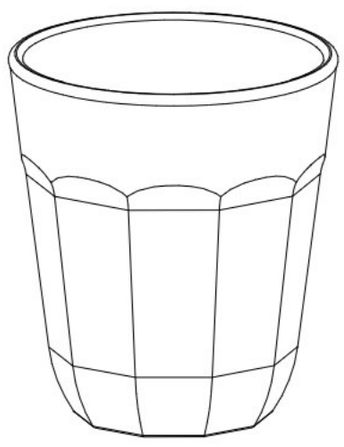

CUP

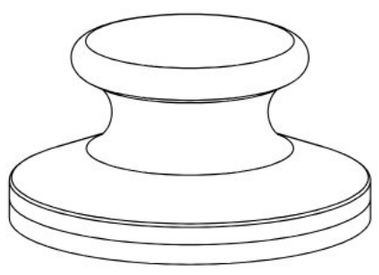

TAMPER

STAND ASSEMBLY

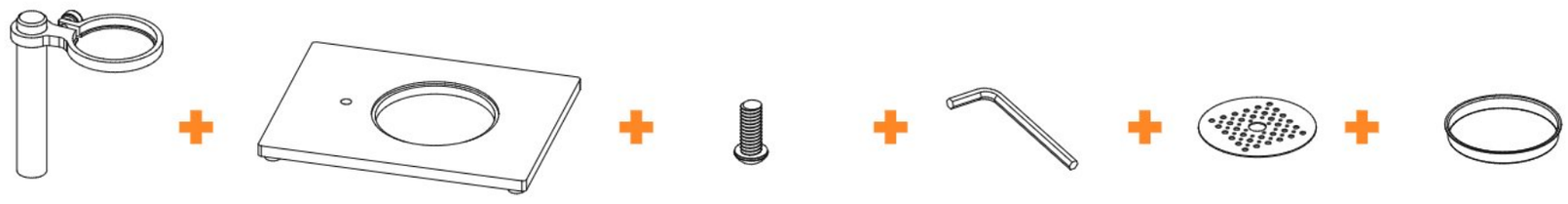

COMPONENTS

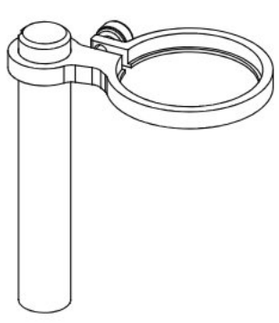

STAND

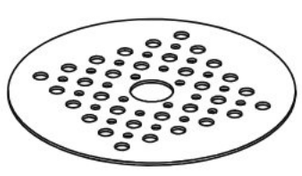

DRIP TRAY GRATE

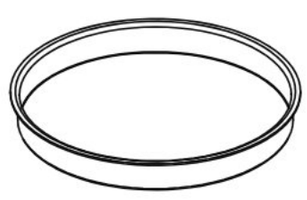

DRIP TRAY

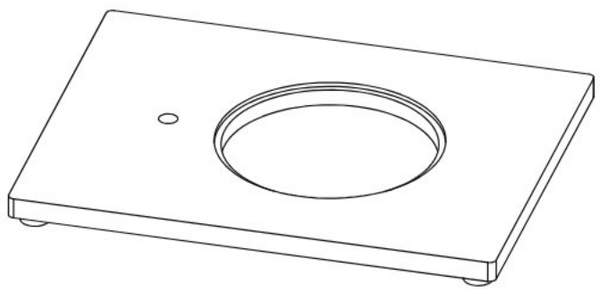

BASE

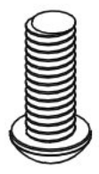

BASE SCREW

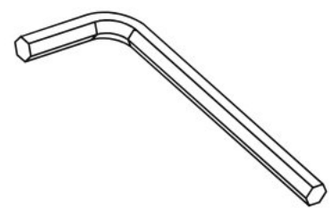

ALLEN KEY

TO TIGHTEN THE BASE SCREW

HOW TO ASSEMBLE

1 LINE UP THE STAND WITH THE HOLE IN THE BASE AND TIGHTEN THE SCREW WITH THE ALLEN KEY INCLUDED IN THE KIT

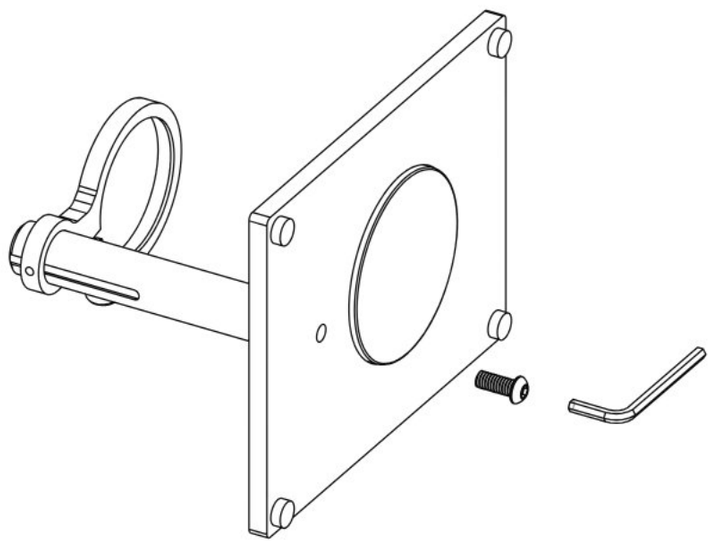

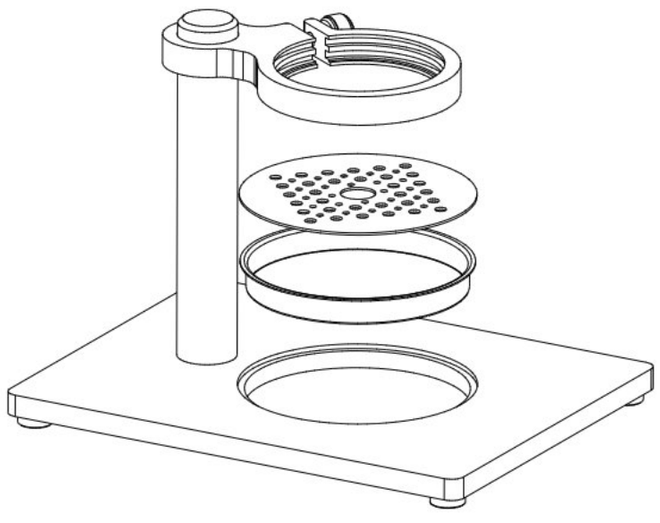

2 PLACE THE DRIP TRAY AND THE DRIP TRAY GRATE ON THE BASE.

COUNTERTOP MODE

HOW TO ASSEMBLE

1 PLACE THE ESPRESSO MAKER, WITHOUT THE PORTAFILTER, ON THE STAND WITH THE SUN SYMBOL FACING FORWARD

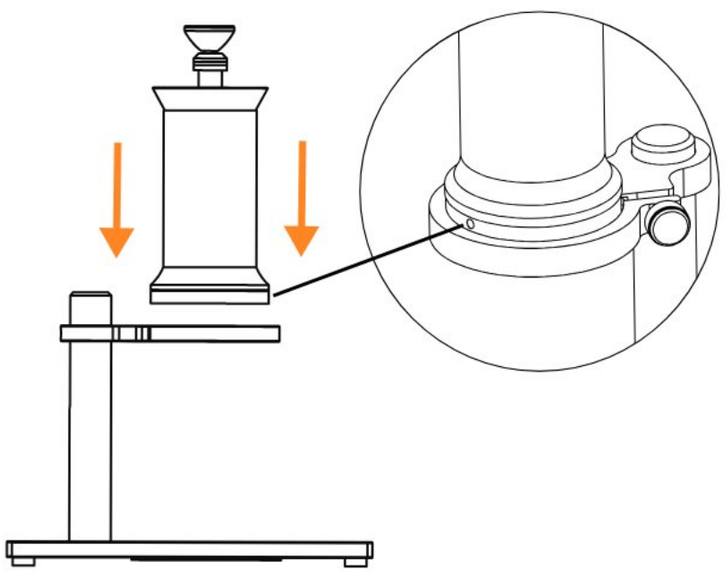

2 LEVEL THE ESPRESSO MAKER ON THE STAND: CHECK THAT IT IS WELL ALIGNED AND FULLY SEATED IN THE STAND

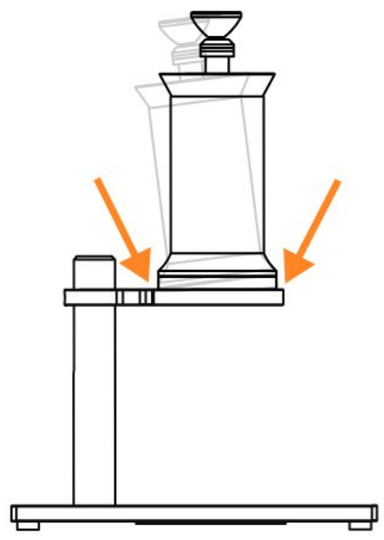

3 TIGHTEN THE GOLD SCREW UNTIL IT IS VERY FIRM

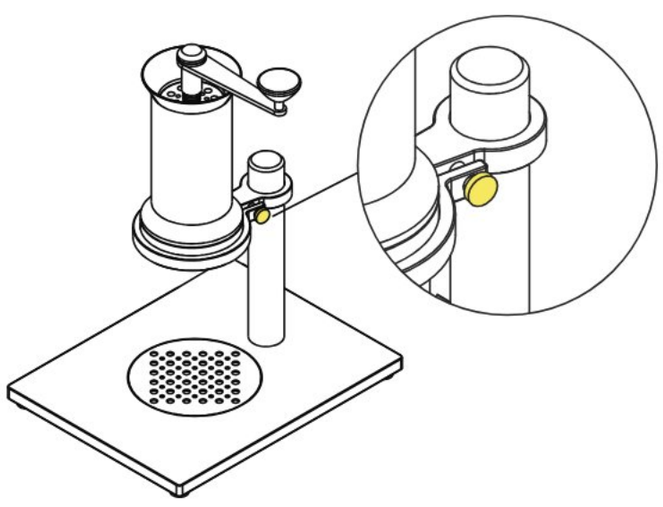

4 FIT THE FILTER INTO THE PORTAFILTER

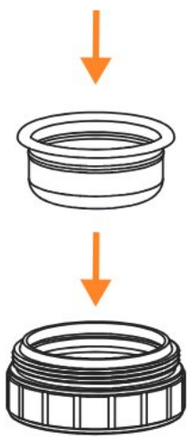

5 FIT THE PORTAFILTER INTO THE ESPRESSO MAKER, LINING UP THE SUN AND MOON SYMBOLS: THAT IS WHERE THE THREAD STARTS



6 TURN THE PORTAFILTER COUNTERCLOCKWISE AND TIGHTEN. THE SYMBOLS DO NOT NEED TO LINE UP AGAIN

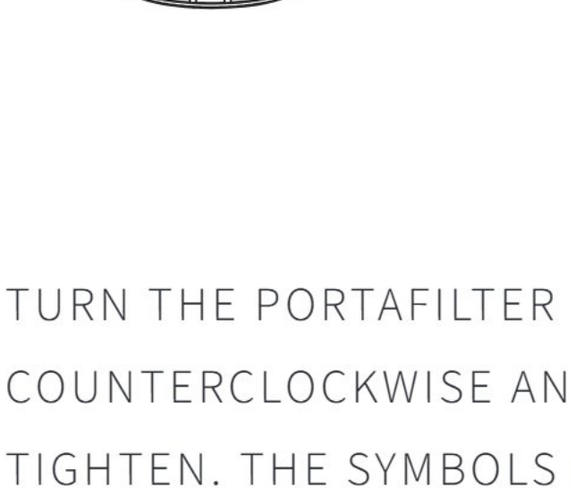

PORTABLE MODE



1

MAKE SURE THE FITTING RING IS ON THE INSIDE OF THE PORTAFILTER.



2

SHAPING THE FITTING RING:



- FIT THE CUP INTO THE PORTAFILTER.
- TWIST AND PRESS FIRMLY.
- LEAVE IT FOR A FEW MINUTES SO THE RING TAKES SHAPE.
- HOLD THE ESPRESSO MAKER OR THE PORTAFILTER FIRMLY AND TWIST THE CUP TO REMOVE IT.

3

FIT THE FILTER INTO THE PORTAFILTER



4

FIT THE PORTAFILTER INTO THE ESPRESSO MAKER, LINING UP THE SUN AND MOON SYMBOLS: THAT IS WHERE THE THREAD STARTS

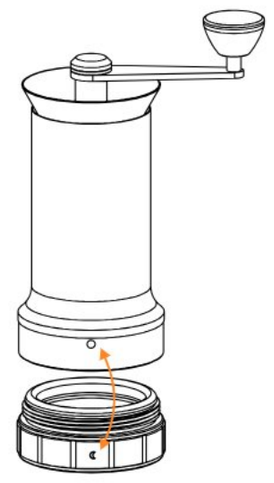

5

TURN THE PORTAFILTER COUNTER-CLOCKWISE AND TIGHTEN WELL. THE SYMBOLS DO NOT NEED TO LINE UP AGAIN

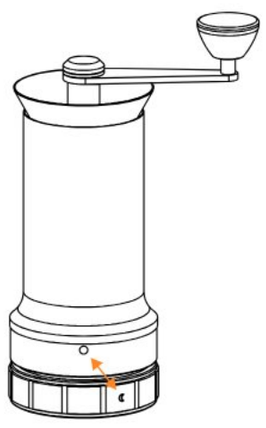

6

ONLY FIT THE CUP WHEN YOU ARE ABOUT TO MAKE THE ESPRESSO. MAKE SURE IT IS SECURELY ATTACHED AND ALIGNED

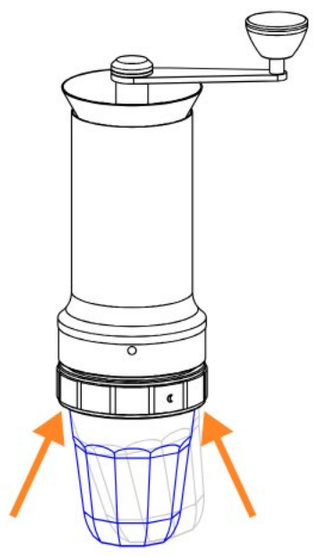

ANY QUESTIONS?
GET IN TOUCH
WITH US:

HELLO@ARAM.COFFEE